SPACE FACULTY

Satellite Design & Integration

DAY 6

2NDSpace

Camera & CoolTerm

To capture a picture with the OBC camera we need to open CoolTerm.

Let’s have a look at the tutorial.

SPACE FACULTY
2NDSpace

ADCS Exercise

Now, let's focus on the ADCS!

Remember that the ADCS has an Arduino Nano Every (USB Micro).

IMPORTANT:

- **Keep the USB C connected to charge the battery for all the exercises since the ADCS draws a lot of current.**
- **DO NOT UPLOAD ANY OF THE OBC PROGRAMS ON THE ADCS.**

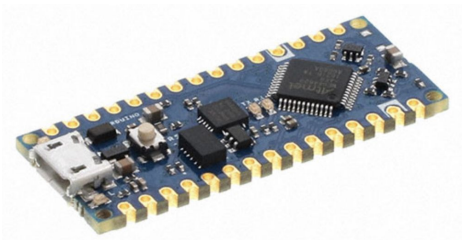

SPACE FACULTY
2NDSpace

ADCS Exercise

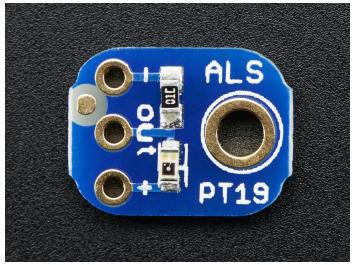

CREATE A NEW SKETCH CALLED *ADCS_EXERCISE*

The ADCS can read values from 3 analog sun sensors (**Adafruit ALS-PT19**) placed inside the solar panels:

- Look at the online documentation of the sun sensors and create a function to read one of them first to see what the output looks like in the serial monitor. Refer to the ADCS schematics to see the pin connection of the sensor.

SPACE FACULTY
2NDSpace

ADCS Exercise

CREATE A NEW SKETCH CALLED *ADCS_EXERCISE*

The ADCS can read values from 3 analog sun sensors (**Adafruit ALS-PT19**) placed inside the solar panels:

- Look at the online documentation of the sun sensors and create a function to read one of them first to see what the output looks like in the serial monitor. Refer to the ADCS schematics to see the pin connection of the sensor.
- Then let's assume the camera has to point to the earth, so the back panel has to face the sun. Create a function that compares the three sun sensors so that the serial monitor output looks like this:

THE CAMERA IS OBSERVING EARTH or
THE SATELLITE POSITION NEEDS TO BE ADJUSTED

- Use the flashlight to check it.

SPACE FACULTY
2NDSpace

ADCS Exercise

We have left, back, and right sun sensors with respect to the camera. We want to control the motor based on their values. The motor is controlled by a so-called H bridge.

An H-bridge is an electronic circuit crucial for controlling the direction of DC motors. It consists of four switches arranged in an "H" shape, allowing the reversal of voltage polarity across the motor. By selectively closing switch pairs, the H-bridge can control the motor's rotation direction—forward, reverse, or brake.

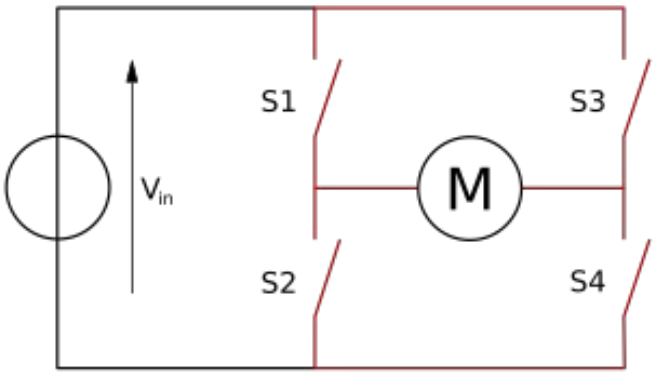

ADCS Exercise

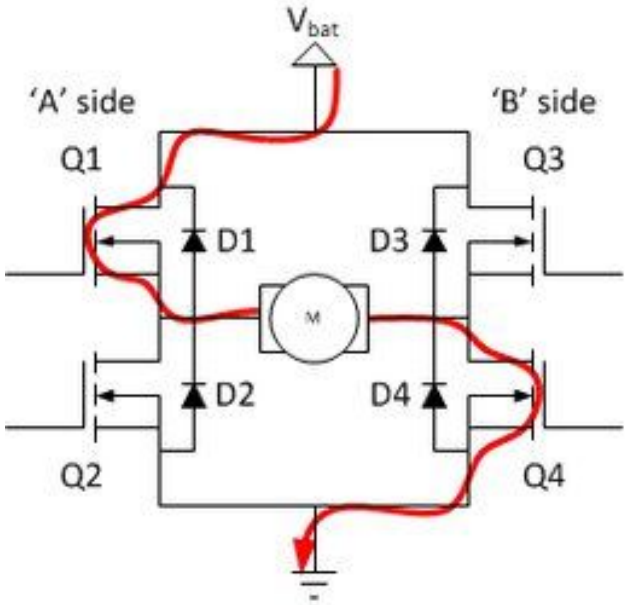

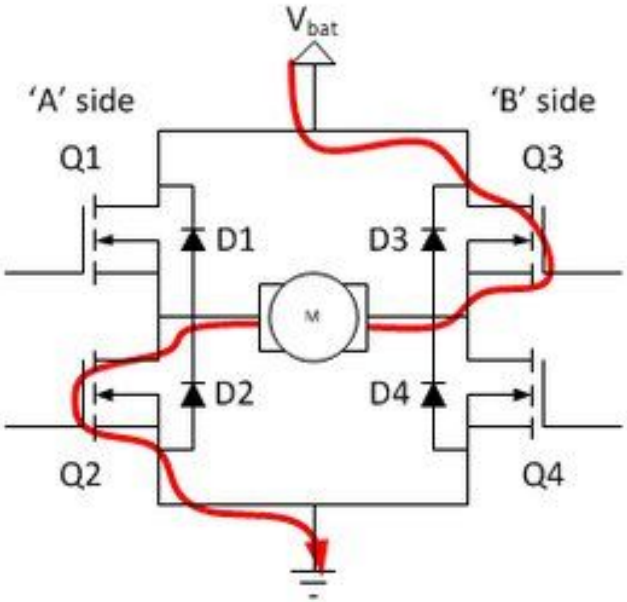

2NDSpace

ADCS Exercise

This is how you correctly drive the motor:

- Set up the **pinMode as an OUTPUT**.
- Always use ***analogWrite()***.
- **Write a speed no higher than 255**.
- Keep a ***delay(100)*** at least.
- **NEVER USE *digitalWrite()***.

```
int motorPin = 9;  // Choose a PWM-enabled pin
int speed = 0;     // Speed variable (0 to 255)

void setup() {
  pinMode(motorPin, OUTPUT);
}

void loop() {
  // Increase speed
  for (speed = 0; speed <= 255; speed++) {
    analogWrite(motorPin, speed);
    delay(10);
  }

  // Decrease speed
  for (speed = 255; speed >= 0; speed--) {
    analogWrite(motorPin, speed);
    delay(10);
  }
}
```

SPACE FACULTY
2NDSpace

ADCS Exercise

Write a function that:

- If the left sensor has more light, the motor starts rotating counterclockwise for 1 second.
- If the back sensor has more light, the motor is stopped.
- If the right sensor has more light, the motor starts rotating clockwise for 1 second.
- Include a Serial.print of the motor status (rotating ccw, rotating cw or stopped).

REMEMBER TO USE analogWrite(), NOT digitalWrite()

The maximum speed written has to be 255.

Use a 5 seconds sample time so that the ADCS Arduino doesn't constantly check the sun sensor values.

SPACE FACULTY
2NDSpace

ADCS Exercise

Test this function by hanging the satellite to the stand!

Once you tested it, un-hand the satellite for the next exercise.

SPACE FACULTY
2NDSpace

ADCS Exercise

Now, comment out the motor and sun sensor parts.

The ADCS has an IMU module called **Adafruit BNO055**, refer to the ADCS schematics for the connections to the Arduino.

- Using online documentation, write a function to read ALL the IMU outputs in the serial monitor.

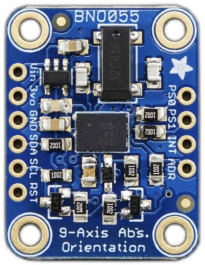

2NDSpace

ADCS Exercise

Now, comment out the motor and sun sensor parts.

The ADCS has an IMU module called Adafruit BNO055, refer to the ADCS schematics for the connections to the Arduino.

- Using online documentation, write a function to read ALL the IMU outputs in the serial monitor.
- Look at the outputs to find the right threshold for the following exercise.
- Create a function called shake() so that if the satellite is shaken, the motor starts rotating clockwise for 500ms and then counterclockwise for 500ms. The program should not repeat itself unless the satellite is shaken again.

SPACE FACULTY
2NDSpace

ADCS and OBC Exercise

Although the ADCS Arduino controls its own sensors and motors, the only way to send commands to it or retrieve readings is by connecting it to the OBC Arduino. To achieve this, a dedicated serial communication link between the ADCS and OBC must be established.

- Refer to the ADCS and OBC schematics to identify which pins are used for this serial connection.
- By looking at the online documentation on Software Serial, write two separate codes (**one to be uploaded on the ADCS, and one to be uploaded on the OBC**) to read the temperature of the ADCS (LM35) from the OBC's serial monitor. **DO NOT UPLOAD THE OBC CODE INTO THE ADCS**

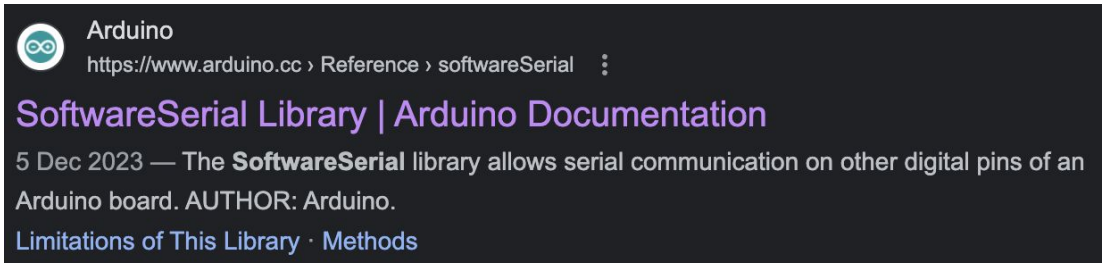

SPACE FACULTY
2NDSpace

ADCS and OBC Exercise

Although the ADCS Arduino controls its own sensors and motors, the only way to send commands to it or retrieve readings is by connecting it to the OBC Arduino. To achieve this, a dedicated serial communication link between the ADCS and OBC must be established.

- Refer to the ADCS and OBC schematics to identify which pins are used for this serial connection.
- By looking at the online documentation on Software Serial, write two separate codes (**one to be uploaded on the ADCS, and one to be uploaded on the OBC**) to read the temperature of the ADCS (LM35) from the OBC's serial monitor.
- Make this function callable from the OBC by typing 'TEMPADCS' into the serial monitor.

DO NOT UPLOAD THE OBC CODE INTO THE ADCS

SPACE FACULTY
2NDSpace

ADCS and OBC Exercise

Write a code that, if we type “SUN” from OBC’s serial monitor, we activate the motor movements we created earlier as specified below:

- If the left sensor has more light, the motor starts rotating counterclockwise for 1 second.
- If the back sensor has more light, the motor is stopped.
- If the right sensor has more light, the motor starts rotating clockwise for 1 second.
- Include a Serial.print of the motor status (rotating ccw, rotating cw or stopped).

REMEMBER TO USE analogWrite(), NOT digitalWrite()

The maximum speed written has to be 255.

Use a 5 seconds sample time so that the ADCS Arduino doesn’t constantly check the sun sensor values.

SPACE FACULTY
2NDSpace

ADCS and OBC Exercise

Include a function called ***detumbling()*** called by typing “DETUMB” that acts like this:

- The motor should move back and forth for 2 seconds in each direction for a total time of 10 seconds and then stops completely. The maximum speed should be 255.

SPACE FACULTY
2NDSpace

ADCS and OBC Exercise

Include a function called ***detumbling()*** called by typing “DETUMB” that acts like this:

- The motor should move back and forth for 2 seconds in each direction for a total time of 10 seconds and then stops completely. The maximum speed should be 255.

Include also a function that

- If the satellite is shaken, a message should appear on the OBC saying: ANOMALY IN ACCELERATION!

SPACE FACULTY
2NDSpace

ADCS and OBC Exercise

Include a function called ***detumbling()*** called by typing “DETUMB” that acts like this:

- The motor should move back and forth for 2 seconds in each direction for a total time of 10 seconds and then stops completely. The maximum speed should be 255.

Include also a function that

- If the satellite is shaken, a message should appear on the OBC saying: ANOMALY IN ACCELERATION!

Now, send me all your reading through LoRa:

[2m 23s] [Team Name] TEMPOBC | TEMPEPS | TEMPADCS | VBAT | Camera_pointing_status

Camera_pointing_status = THE CAMERA IS OBSERVING EARTH or THE SATELLITE POSITION NEEDS TO BE ADJUSTED

Satellite Design & Integration

END of DAY 6

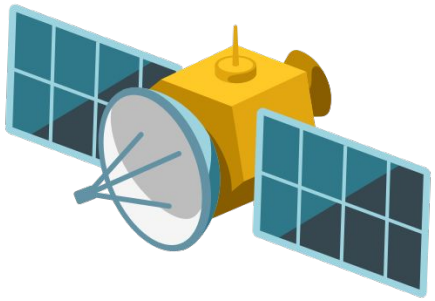

2NDSpace